Submittal Sheet

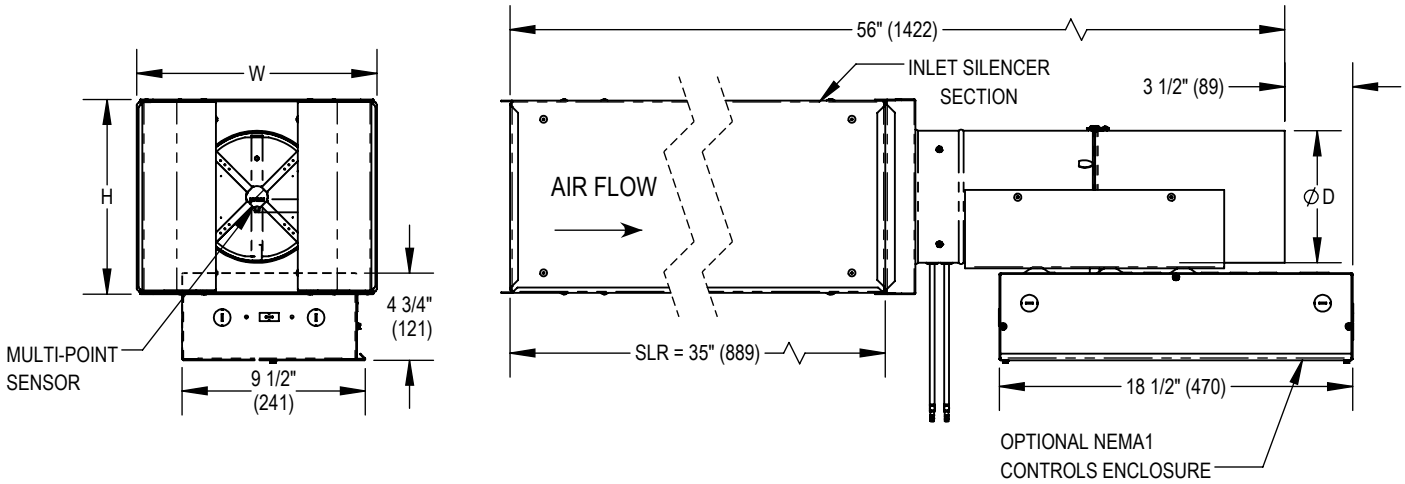

STANDARD CONSTRUCTION:

- 22 GAUGE GALVANIZED STEEL HOUSING. MECHANICALLY SEALED, LEAK RESISTANT CONSTRUCTION.
- SILENCER - MEDIUM PRESSURE STYLE, 20 GAUGE GALVANIZED CASING WITH PERFORATED LINER OVER FIBERGLASS ACOUSTIC MEDIA.
- RECTANGULAR INLET OPENING WITH SLIP AND DRIVE CLEAT DUCT CONNECTION.
- MULTI-POINT, CENTER AVERAGING AIRFLOW SENSOR.
- 1/2" (13mm) GALVANIZED DAMPER SHAFT WITH POSITION INDICATOR.

CONTROLS OPTIONS:

☐ FIELD MOUNTED CONTROLS, SUPPLIED BY OTHERS (FLD)
☐ FACTORY MOUNTED DIGITAL CONTROLS, SUPPLIED BY OTHERS (FAC)
☐ FACTORY MOUNTED DIGITAL CONTROLS, SUPPLIED BY PRICE (EHPD)
☐ FACTORY MOUNTED PNEUMATIC CONTROLS, SUPPLIED BY PRICE (EHPP)

UNIT OPTIONS:

☐ NEMA1 CONTROLS ENCLOSURE (PS)
☐ DISCONNECT SWITCH (DSW)
☐ REMOVABLE SENSOR (RS)
☐ ORIFICE RING FLOW SENSOR (ORF)
☐ BRASS AIRFLOW SENSOR GAUGE TAPS (GT)

SILENCER LINER OPTIONS:

☐ POLYMER LINER (PL)
☐ FIBERGLASS CLOTH (FC)

UNIT SIZE	INLET SIZES D	WIDTH W	HEIGHT H
6	5 7/8 (149)	12 (305)	8 (254)
7	6 7/8 (175)		10 (254)
8	7 7/8 (200)		
9	8 7/8 (225)	14 (356)	12 1/2 (318)
10	9 7/8 (251)		
12	11 7/8 (302)	16 (406)	15 (381)
14	13 7/8 (352)	20 (508)	17 1/2 (445)
16	15 7/8 (403)	24 (610)	18 (457)

ALL METRIC DIMENSIONS [ ] ARE SOFT CONVERTED. IMPERIAL DIMENSIONS ARE CONVERTED TO METRIC AND ROUNDED TO THE NEAREST MILLIMETER.

PROJECT:		
ENGINEER:	APPROVED BY: BS	**RDV** EXHAUST CONTROL VALVE VARIABLE VOLUME INLET SILENCER CONTROLS BOTTOM
CUSTOMER:	DRAWING NO: 277888	
SUBMITTAL DATE: / **SPEC. SYMBOL:**	DATE DRAWN: 2025-05-22	

© Copyright PRICE INDUSTRIES 2025

Submittal Sheet

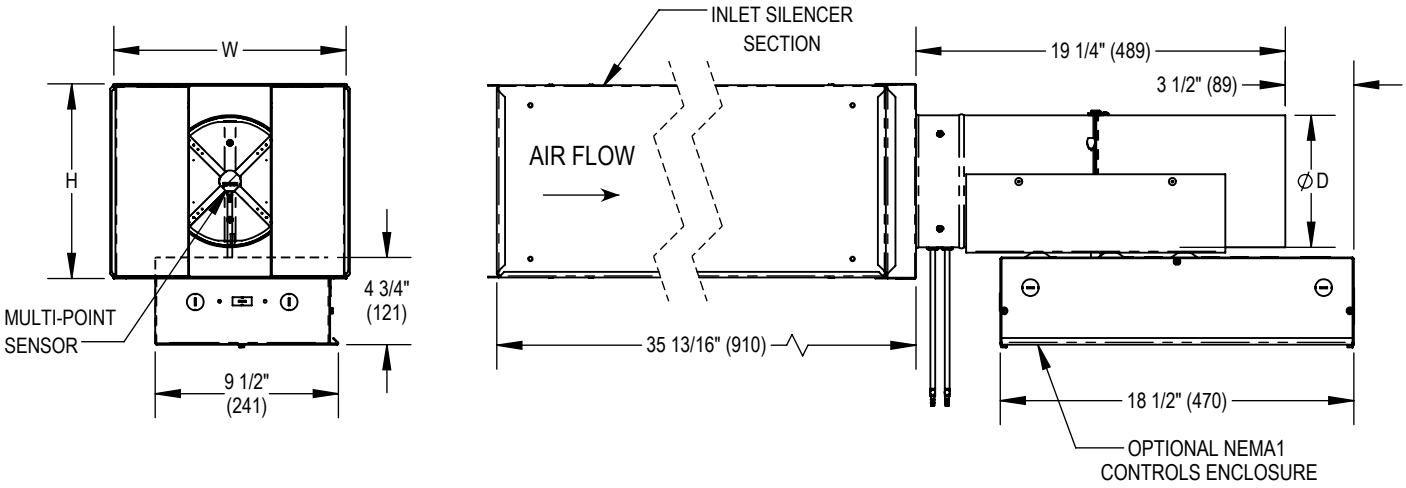

STANDARD CONSTRUCTION:

- 20 GAUGE 316 STAINLESS STEEL HOUSING. MECHANICALLY SEALED, LEAK RESISTANT CONSTRUCTION.
- STAINLESS STEEL HARDWARE.
- SILENCER - 20 GAUGE TYPE 316 STAINLESS STEEL CASING WITH PERFORATED LINER OVER FIBERGLASS ACOUSTIC MEDIA.
- RECTANGULAR INLET OPENING WITH SLIP AND DRIVE CLEAT DUCT CONNECTION.
- MULTI-POINT, CENTER AVERAGING AIRFLOW SENSOR.
- 1/2" (13mm) STAINLESS STEEL DAMPER SHAFT WITH POSITION INDICATOR.

CONTROLS OPTIONS:

☐ FIELD MOUNTED CONTROLS, SUPPLIED BY OTHERS (FLD)
☐ FACTORY MOUNTED DIGITAL CONTROLS, SUPPLIED BY OTHERS (FAC)
☐ FACTORY MOUNTED DIGITAL CONTROLS, SUPPLIED BY PRICE (EHPD)
☐ FACTORY MOUNTED PNEUMATIC CONTROLS, SUPPLIED BY PRICE (EHPP)

UNIT OPTIONS:

☐ NEMA1 CONTROLS ENCLOSURE (PS)
☐ STAINLESS STEEL NEMA1 CONTROLS ENCLOSURE (SSPS)
☐ DISCONNECT SWITCH (DSW)
☐ BRASS AIRFLOW SENSOR GAUGE TAPS (GT)

LINER OPTIONS:

☐ POLYMER LINER (PL)
☐ FIBERGLASS CLOTH (FC)

UNIT SIZE	INLET SIZES D	WIDTH W	HEIGHT H
6	$5\,^{7}/_{8}$ (149)	12 (305)	8 (254)
7	$6\,^{7}/_{8}$ (175)		10 (254)
8	$7\,^{7}/_{8}$ (200)		
9	$8\,^{7}/_{8}$ (225)	14 (356)	$12\,^{1}/_{2}$ (318)
10	$9\,^{7}/_{8}$ (251)		
12	$11\,^{7}/_{8}$ (302)	16 (406)	15 (381)
14	$13\,^{7}/_{8}$ (352)	20 (508)	$17\,^{1}/_{2}$ (445)
16	$15\,^{7}/_{8}$ (403)	24 (610)	18 (457)

ALL METRIC DIMENSIONS [ ] ARE SOFT CONVERTED. IMPERIAL DIMENSIONS ARE CONVERTED TO METRIC AND ROUNDED TO THE NEAREST MILLIMETER.

PROJECT:		price
ENGINEER:		APPROVED BY: BS
CUSTOMER:		DRAWING NO: 278491
SUBMITTAL DATE:	**SPEC. SYMBOL:**	DATE DRAWN: 2025-05-22

RDV
EXHAUST CONTROL VALVE
VARIABLE VOLUME
INLET SILENCER
CONTROLS BOTTOM, SS

© Copyright PRICE INDUSTRIES 2025